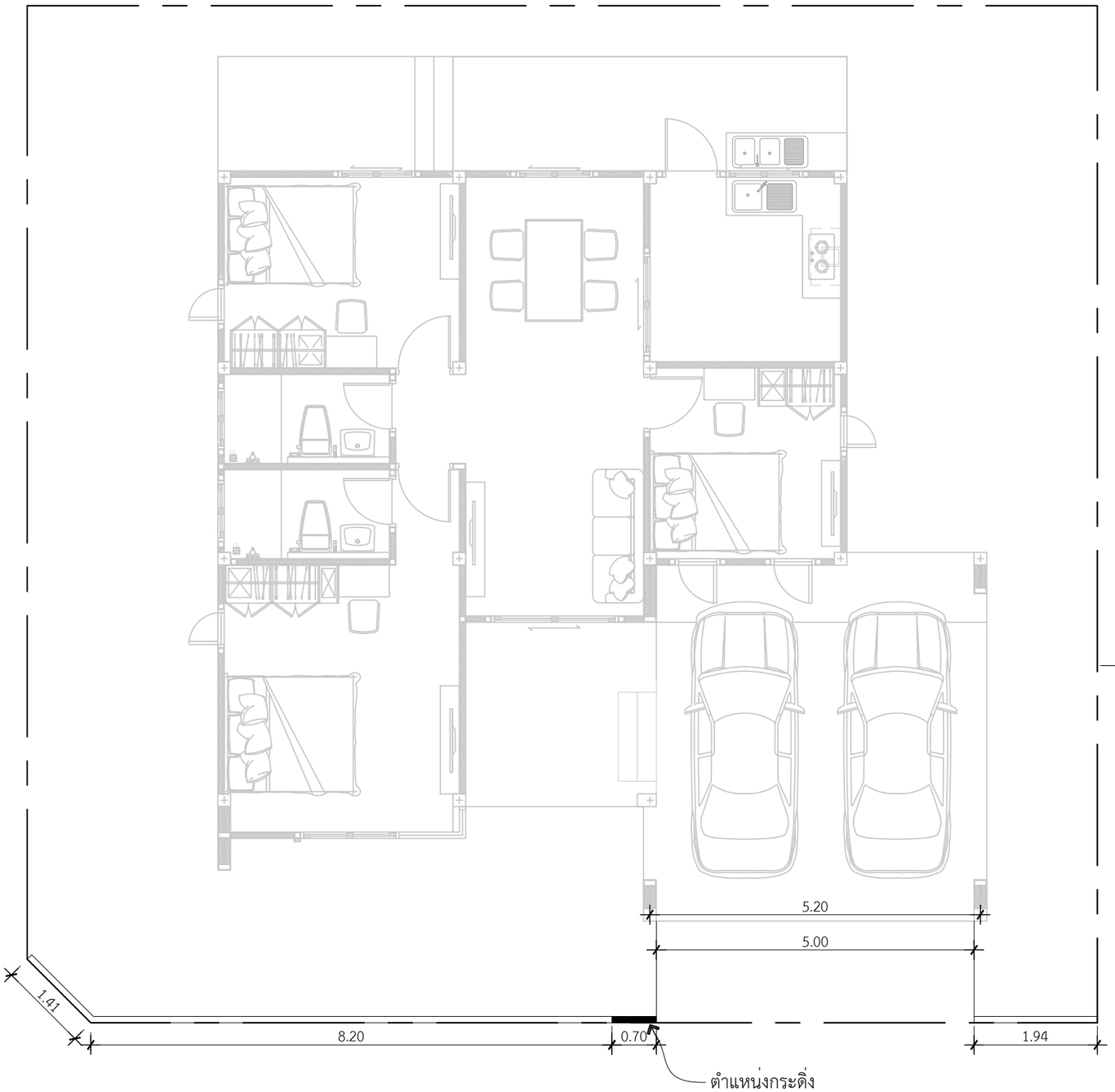


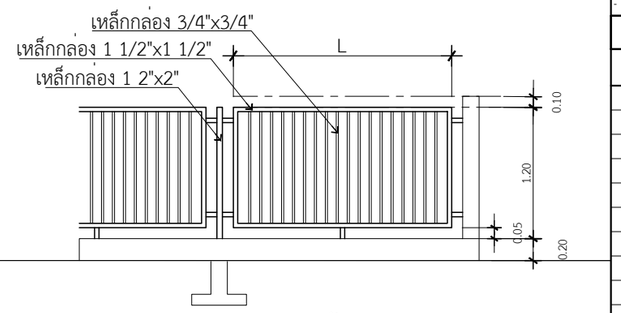


แบบขยายรั้ว

แปลนรั้วเหล็ก

IN SCALE 1 : 75

DBuild ดีบิลด์

PROJECT

DATE :

ARCHITECT

STRUCTURAL ENGINEER

SANITARY ENGINEER

MECHANICAL ENGINEER
-

LANDSCAPE PROJECT
-

REVISE

| No. | Detail | Date |
|---|---|---|
| | | |

KEY PLAN

DRAWING TITLE

SCALE : 1: 75

Drawing No:

Sheet No : 00

DOCUMENT No :