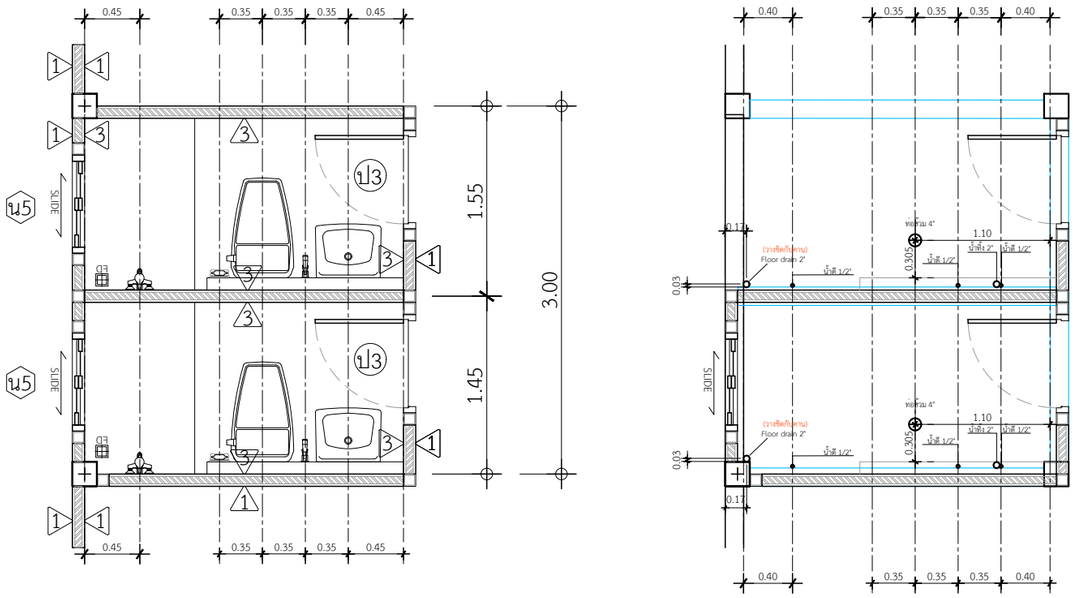

แบบขยายวางสลิปท่อห้องน้ำ 1,2

IN SCALE 1 : 50

QDHouse

PROJECT

DATE :

ARCHITECT

STRUCTURAL ENGINEER

SANITARY ENGINEER
-

MECHANICAL ENGINEER
-

LANDSCAPE PROJECT
-

REVISE

No.	Detail	Date

KEY PLAN

DRAWING TITLE

SCALE : 1: 50

Drawing No:

Sheet No : 00

DOCUMENT No :