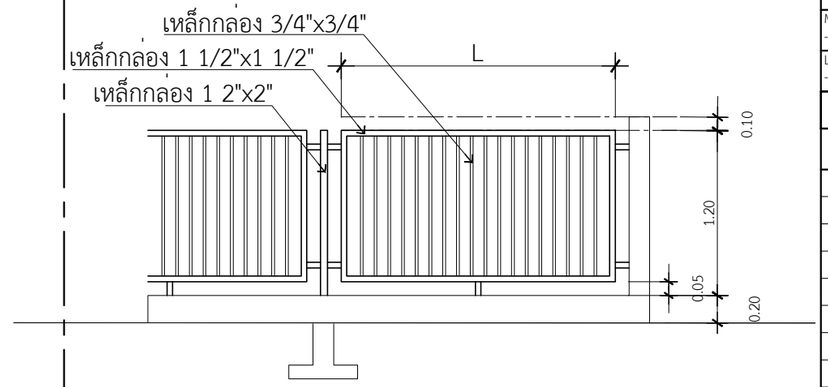

แบบขยายรั้ว

แปลนรั้วเหล็ก

IN SCALE 1 : 75

QDHouse คว้ดฮ้าส์

PROJECT

DATE :

ARCHITECT

STRUCTURAL ENGINEER

SANITARY ENGINEER
-

MECHANICAL ENGINEER
-

LANDSCAPE PROJECT
-

REVISE

No.	Detail	Date

KEY PLAN

DRAWING TITLE

SCALE :

Drawing No:

Sheet No : 00

DOCUMENT No :